WIPER/WASHER SYSTEM

1998 Pontiac Bonneville

1998 ACCESSORIES & EQUIPMENT
General Motors Corp. - Wiper/Washer System

Buick; LeSabre
Oldsmobile; Eighty-Eight, LSS, Regency
Pontiac; Bonneville

DESCRIPTION & OPERATION

CAUTION: To prevent scratching, wet the windshield before turning on wipers.

Wipers use a depressed-park system (wipers park below bottom of windshield). System uses a 2-speed wiper motor. A washer motor is attached to a washer fluid reservoir. A circuit board on the wiper motor cover controls power to the washer motor. The circuit board on the wiper motor cover controls the delay function. See Figs. 1 and 2.

MODEL IDENTIFICATION TABLE

Body Code	Model
H	Bonneville, Eighty Eight, LeSabre, LSS & Regency

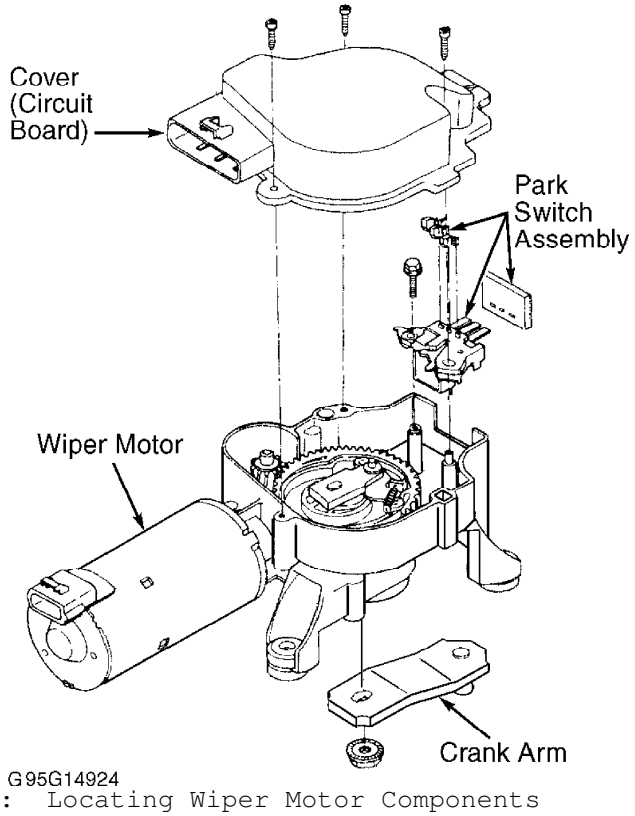

Fig. 1: Locating Wiper Motor Components
Courtesy of General Motors Corp.

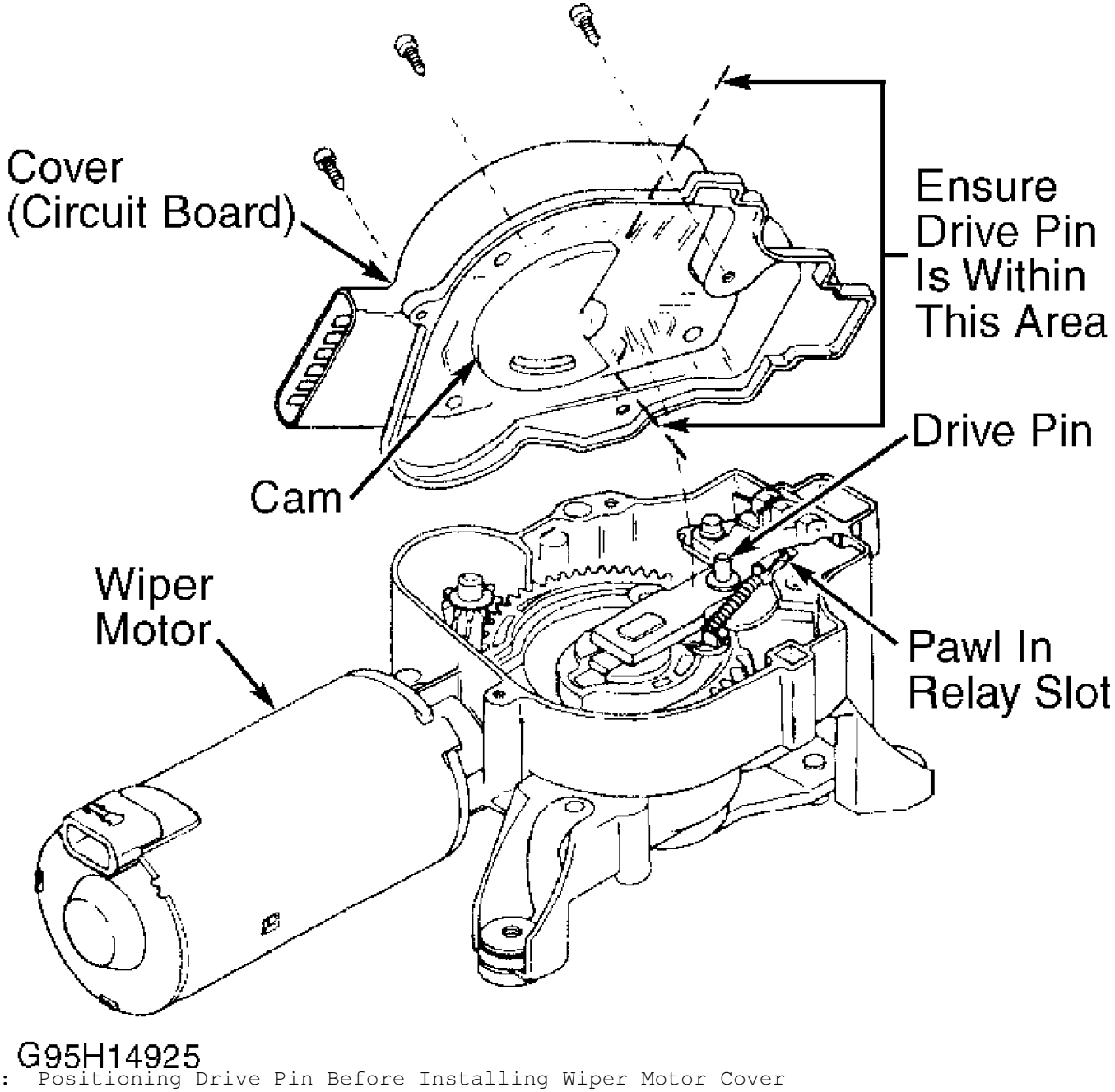

Fig. 2: Positioning Drive Pin Before Installing Wiper Motor Cover
Courtesy of General Motors Corp.

ADJUSTMENTS

WIPER ARMS

1) In park position, each wiper arm should be snug against parking ramp. Move wipers to outer wipe position (top of sweep). Distance between left wiper arm and vertical edge of windshield should be 1 3/8-4 1/2" (35-114 mm).

2) While wipers are operating, wiping pattern of right blade should overlap wiping pattern of left blade. If wiper arms are not

positioned as specified, remove and reposition wiper arms.

TROUBLE SHOOTING

Before performing any test on wiper/washer system, check the following items to eliminate common problems:

* Check wiper/washer related fuses.
* Check washer reservoir level.
* Check for kinked or damaged washer hoses.
* Check for damaged washer pump.
* Check for damaged, loose or corroded connections.
* Check for damaged wiring harness.
* Ensure washer nozzles are not plugged.
* Check for binding or damaged wiper arm linkage.

Correct any obvious problems before continuing testing. If problem still exists, identify wiper/washer symptom and perform appropriate test. See TESTING.

TESTING

* PLEASE READ THIS FIRST *

NOTE: Before testing, ensure wiper motor is securely mounted. Ensure washer hoses are not kinked, disconnected or broken. Ensure fuses are okay.

WIPERS DO NOT OPERATE IN ANY MODE

1) Disconnect wiper switch 5-pin connector. Turn ignition switch to RUN position. Connect test light between chassis ground and terminal E5 Yellow wire of wiper switch connector. See WIRING DIAGRAMS . If test light does not come on, replace fuse and/or repair open circuit in Yellow wire.

2) If test light is on, disconnect 3-pin connector from wiper motor. Connect test light between battery voltage and terminal "C" (Black wire) of 3-pin connector. See Fig. 3. If test light does not come on, repair open circuit in Black wire.

3) If test light is on, reconnect wiper switch connector. Disconnect 6-pin connector from wiper motor. Connect test light between chassis ground and terminal "C" (Dark Green wire) of wiper motor connector. See Fig. 4. If test light is on, go to next step. If test light is off, check for open in Dark Green wire. If Dark Green wire is okay, replace wiper switch.

4) Turn wiper switch to LO position. Connect test light between chassis ground and terminal "B" (Gray wire) of wiper motor connector. If test light is on, go to next step. If test light is off, check for open circuit in Gray wire. If Gray wire is okay, replace wiper switch.

5) Check for continuity of Yellow wire between terminal "B" of 3-pin connector and terminal "A" of 6-pin connector. If there is no continuity, repair open in Yellow wire. If there is continuity, check for poor wiring connection at wiper motor connector C2 terminal "A" (Purple Wire). If connection is okay, replace wiper motor assembly.

WIPERS RUN AT HIGH SPEED ONLY (LOW SPEED INOPERATIVE)

1) Disconnect 6-pin connector from wiper motor. Turn ignition switch to RUN position. Turn wiper switch to LO position. Connect test light between chassis ground and terminal "B" (Gray wire) of wiper

motor 6-pin connector. See Fig. 4. If test light is on, go to next step. If test light is off, check for open in Gray wire. If Gray wire is okay, replace wiper switch.

2) Connect test light between chassis ground and terminal "C" (Dark Green wire) of wiper motor 6-pin connector. If light is on, go to next step. If test light is off, check for open in Dark Green wire. If Dark Green wire is okay, replace wiper switch.

3) Check for continuity in Yellow wire between terminal "B" of 3-pin connector and terminal "A" of 6-pin connector. If there is no continuity, repair open in Yellow wire. If there is continuity, check for poor wiring connection of 3-pin connector at wiper motor. If connection is okay, replace wiper motor cover.

WIPERS RUN AT LOW SPEED ONLY (HIGH SPEED INOPERATIVE)

1) Disconnect 3-pin connector from wiper motor. Turn ignition switch to RUN position. Turn wiper switch to HI position. Connect test light between chassis ground and terminal "A" (Purple wire) of 3-pin connector. See Fig. 3.

2) If test light is on, check for poor wiring connection at wiper motor. If connection is okay, replace wiper motor. If test light is off, check for open circuit in Purple wire. If Purple wire is okay, replace wiper switch.

WIPERS RUN INTERMITTENTLY IN LOW OR HIGH SPEED SETTINGS

1) Remove wiper system fuse. Connect an ammeter across fuse block terminals. Turn ignition switch to RUN position. Turn wiper switch to LO position. Note lowest current draw while wipers are running on dry glass (current draw will fluctuate).

2) If lowest current draw is less than 3.5 amps, replace wiper motor. If lowest current draw is more than 6.5 amps, go to next step. If lowest current draw is 3.5-6.5 amps, check for poor connection or intermittent open circuit at all connectors. If no faults are found, replace wiper motor.

3) Replace wiper blade elements and repeat test. If lowest current draw is still more than 6.5 amps, go to next step. If lowest current draw is not more than 6.5 amps, testing is complete.

4) Disconnect drive link from wiper motor crank arm and repeat test. If lowest current draw is still more than 6.5 amps, replace wiper motor. If lowest current draw is not more than 6.5 amps, wiper linkage is binding. Replace or repair as required, and repeat test.

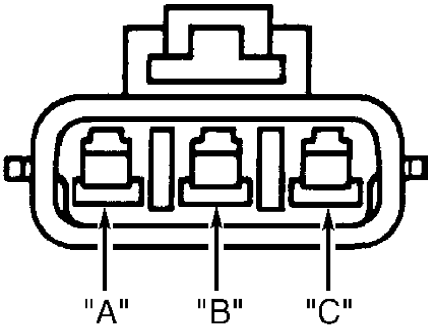

97H28792

Fig. 3: Wiper Motor Wiring Harness 3-Pin Connector Terminals
Courtesy of General Motors Corp.

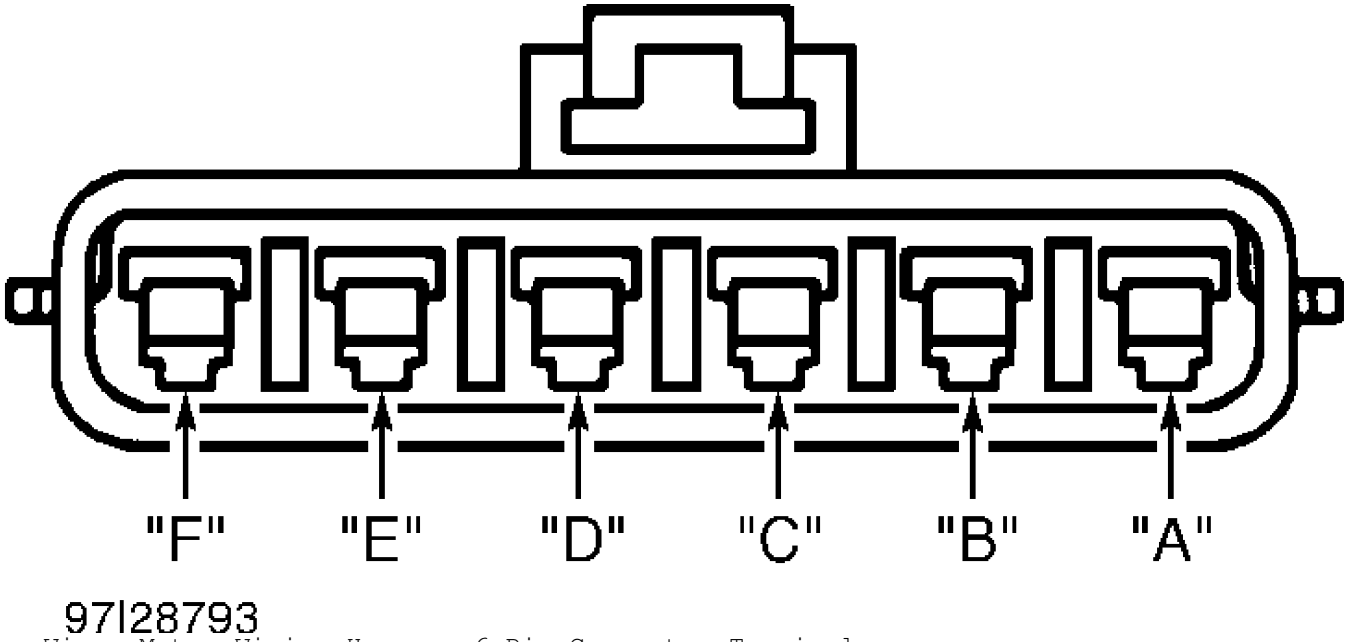

Fig. 4: Wiper Motor Wiring Harness 6-Pin Connector Terminals
Courtesy of General Motors Corp.

WIPERS WILL NOT SHUT OFF

1) Turn wiper switch to OFF position. Disconnect 6-pin connector from wiper motor. Turn ignition switch to RUN position. Using a DVOM, measure voltage between chassis ground and terminal "B" (Gray wire) of wiper motor 6-pin connector. See Fig. 4.

2) If zero volts is present, go to next step. If battery voltage is present, check for short to battery voltage in Gray wire. If wire is okay, replace wiper switch.

3) Disconnect 3-pin connector from wiper motor. Measure voltage between chassis ground and terminal "A" (Purple wire) terminal of wiper motor 3-pin connector. See Fig. 3. If zero volts is present, repair short to battery voltage in Yellow wire between wiper motor connectors.

4) If battery voltage is present, check for short to battery voltage in Purple wire. If Purple wire is okay, replace wiper switch.

WIPERS CYCLE IN & OUT OF PARK POSITION AFTER WIPERS ARE SHUT OFF

If wipers do not operate in LO speed, go to WIPERS RUN AT HIGH SPEED ONLY (LOW SPEED INOPERATIVE). If wipers operate in LO speed, replace wiper park switch. See WIPER PARK SWITCH under REMOVAL & INSTALLATION. If symptom still exists, replace wiper motor assembly.

PULSE DELAY OPERATES INCORRECTLY OR NOT AT ALL

1) Turn ignition switch to OFF position. Disconnect wiper switch 5-pin connector. Turn wiper switch to DELAY position. Connect ohmmeter between wiper switch connector terminals E5 (Yellow wire) and E9 (Pink wire). Move wiper switch through entire delay range.

2) Resistance should incrementally change from about 24 k/ohms to 1.2 megohms. If resistance is not as specified, replace wiper switch. If resistance is as specified, measure resistance between wiper switch connector terminals E5 (Yellow wire) and E6 (Gray

wire).

3) If resistance is more than 3 ohms, replace wiper switch. If resistance is 3 ohms or less, check for open in Gray wire or Pink wire between wiper switch and wiper motor. If circuits are okay, remove wiper motor cover (circuit board).

4) Check to see if park switch pulse terminals are touching pads on circuit board. If contacts are touching pads, replace wiper motor cover. If contacts are not touching pads, replace park switch spring contacts.

WASHER MOTOR DOES NOT OPERATE

1) Disconnect washer motor connector. Turn ignition switch to RUN position. Connect test light between terminals of washer motor connector. While observing test light, activate washer switch. If test light is off, go to next step. If test light is on, check for poor wiring connection at washer motor. If connection is okay, replace washer motor.

2) Connect test light between chassis ground and Red wire terminal of washer motor connector. Activate washer switch. If test light is off, go to next step. If test light is on, check for open in Dark Blue wire between washer motor and wiper motor. If wire is okay, replace wiper motor.

3) Connect test light between chassis ground and terminal "D" of wiper motor 6-pin connector (Red wire). If test light is on, repair open in Red wire between wiper motor and washer motor.

4) If test light is off, with ignition switch in RUN position, using a DVOM, backprobe from Pink wire terminal of wiper switch connector to ground. Activate washer switch. If no voltage is present, replace wiper switch. If battery voltage is present, check for open in Pink wire or poor wiring connection. If wire and connection are okay, replace wiper motor cover.

WASHER WILL NOT SHUT OFF

1) Turn ignition switch to RUN position. Turn wiper switch to LO position. Disconnect 6-pin connector from wiper motor. Connect test light between wiper motor case (ground) and terminal "F" (Pink wire) of wiper motor 6-pin connector. See Fig. 4.

2) Momentarily activate washer switch while observing test light. If test light is on when washer switch is released, replace wiper switch. If test light is off, replace wiper motor cover (circuit board). See Figs. 1 and 2.

REMOVAL & INSTALLATION

* PLEASE READ THIS FIRST *

CAUTION: When battery is disconnected, vehicle computer and memory systems may lose memory data. Driveability problems may exist until computer systems have completed a relearn cycle. See COMPUTER RELEARN PROCEDURES article in the GENERAL INFORMATION section before disconnecting battery.

WIPER ARMS R & I

Removal

Turn ignition switch to RUN position. Turn wipers on. When wipers are at mid-wipe position, turn ignition off. Lift wiper arm away from windshield. Push out wiper arm retaining latch with a screwdriver. Pull wiper arm off of splined shaft (if necessary, use a battery terminal puller).

Installation

1) Turn ignition switch to ACCY position. Turn wiper switch to LO position, then off. Turn ignition off. This returns wiper arm posts to park position. Install wiper arm, ensuring it is positioned slightly below stop surface of park ramp.

2) Lift wiper blade to relieve pressure on retaining latch. Push retaining latch in. Lift wiper arm up onto park ramp. Ensure wiper arms are correctly positioned. See WIPER ARMS under ADJUSTMENTS.

WIPER MOTOR ASSEMBLY

Removal & Installation

Remove wiper arms. See WIPER ARMS R & I. Remove cowl vent screen(s). Disconnect wiper motor electrical connectors. Using Wiper Transmission Separator (J 39232), separate drive link from crank arm. Remove wiper motor screws. Remove wiper motor, guiding crank arm through hole. Remove crank arm from wiper motor. To install, reverse removal procedure. Ensure wiper arms are correctly positioned. See WIPER ARMS under ADJUSTMENTS.

WIPER MOTOR COVER (CIRCUIT BOARD)

Removal & Installation

Remove wiper motor assembly (if necessary). Remove screws and wiper motor cover. See Figs. 1 and 2. Ensure wiper motor is in park position. Ensure drive pin is positioned as illustrated. See Fig. 2. To complete installation, reverse removal procedure.

WIPER PARK SWITCH

Removal

Remove wiper motor cover (circuit board). See WIPER MOTOR COVER (CIRCUIT BOARD). If wiper motor is in park position, operate motor until lock pawl can be removed from relay slot. See Fig. 2. Remove screw and park switch.

Installation

To install, reverse removal procedure. Before installing wiper motor cover, ensure wiper motor is in park position. Ensure drive pin is positioned as illustrated. See Fig. 2. To complete installation, reverse removal procedure.

WIPER TRANSMISSION ASSEMBLY

Removal & Installation

Remove wiper arms. See WIPER ARMS R & I. Remove cowl panel vent screen(s). Separate drive link from crank arm. Remove screws securing drive link assembly to body. Remove drive link assembly through access hole in shroud. To install, reverse removal procedure. Ensure wiper arms are correctly positioned. See WIPER ARMS under ADJUSTMENTS.

WIPER/WASHER SWITCH

Removal & Installation

Wiper/washer switch is an integral part of multifunction switch. See STEERING COLUMN SWITCHES article.

WASHER MOTOR

Removal & Installation

Drain and remove washer fluid reservoir. Remove washer motor from reservoir. To install, reverse removal procedure.

WIRING DIAGRAMS

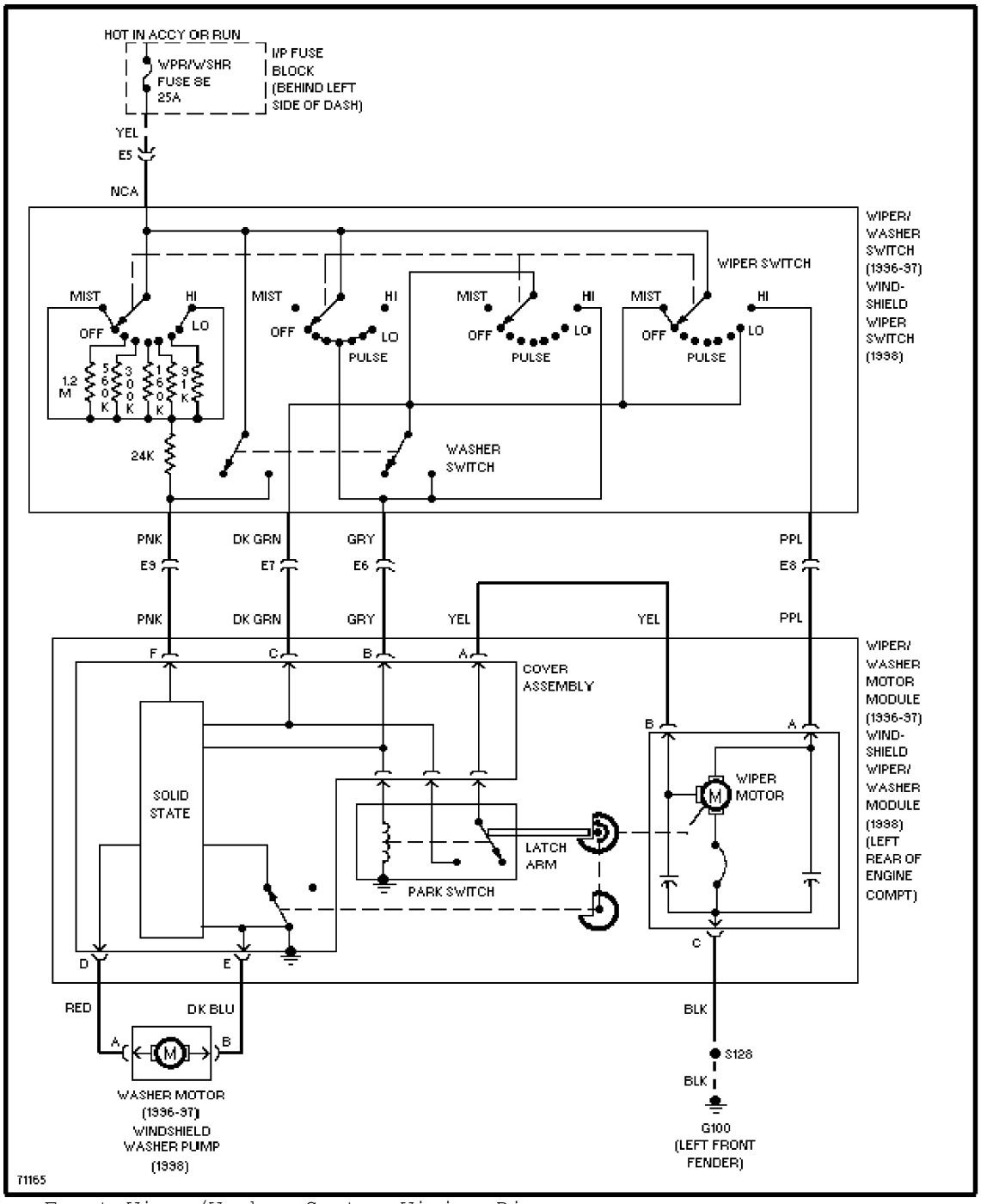

Fig. 5: Front Wiper/Washer System Wiring Diagram