KEYLESS ENTRY SYSTEM - REMOTE

1998 Pontiac Bonneville

1998 ACCESSORIES & EQUIPMENT
General Motors Corp. - Remote Keyless Entry System

Buick; LeSabre
Oldsmobile; Eighty Eight, LSS & Regency
Pontiac; Bonneville

DESCRIPTION & OPERATION

NOTE: Body Control Module (BCM) may also be referred to as Multifunction Alarm, Lock & Lighting (MALL) module.

Remote Keyless Entry (RKE) system consists of an RKE transmitter and in-vehicle Remote Function Actuator (RFA) module. RFA module receives a signal from RKE transmitter and sends a signal to Body Control Module (BCM), to perform unlock and lock functions. RFA module controls all other RKE functions. RKE transmitter can operate the following functions (if equipped):

* Unlock Drivers Door
* Lock Or Unlock All Doors
* Lock & Unlock Fuel Door (Pontiac Only)
* Panic Alarm
* Interior Lighting
* Trunk Lid Release
* Programmable Automatic Door Locks (ADL)
* Programmable Delayed Locking Feature
* Programmable Seat & Outside Mirror Memory
* Programmable Perimeter Lighting Feature

Depressing UNLOCK button On RKE transmitter once, unlocks driver's door and illuminates interior lights (if ignition is off). Depressing UNLOCK button a second time within 5 seconds unlocks all doors and illuminates interior lights (if ignition is off). Depressing LOCK button on RKE transmitter opens rear compartment. Depressing PANIC button on RKE transmitter sounds horn and flashes lights for up to 2 minutes. This function can be deactivated by depressing PANIC button again, unlocking vehicle with key if equipped with Universal Theft Deterrent (UTD) or turning on ignition.

COMPONENT LOCATION

REMOTE KEYLESS ENTRY COMPONENT LOCATION TABLE

Component	Location
Body Control Module (BCM)	Under Right Side Of Instrument Panel
Data Link Connector (DLC)	Under Right Side Of Instrument Panel
Instrument Panel (I/P) Fuse Block	Left Side Of Instrument Panel, Behind Trim Panel
Park/Neutral Position (PNP) Switch	Left Side Of Transaxle, Below EGR Valve
Remote Function Actuator (RFA) Module	Right Side Of Instrument Panel, Near Rear Of Glove Box
Right Junction Block	Under Rear Seat, Left Side

PROGRAMMING PROCEDURES

NOTE: When RFA module is replaced, it is very important to follow programming procedure carefully. Failure to do so will cause inoperative or malfunctions in RFA system.

RFA PROGRAMMING

1) Program transmitters. See PROGRAMMING TRANSMITTERS. Connect scan tool. Turn ignition switch to RUN position. Select vehicle being programmed. Select Body. Select RFA. Select RFA test. Select Set Options. Select option 0.

3) Scroll through screens until desired function is displayed. Select each function that needs to be enabled for vehicle application. See RPO OPTIONS FOR KEYLESS ENTRY REPROGRAMMING table.

4) Use table to select functions that are standard or optional for particular vehicle being serviced.

5) When selecting functions on a new RFA module on a vehicle that has Theft Deterrent (UA6), Option 3 must be selected. FACTORY USE ONLY SPEED UP will appear as the only selection. Select NO, then EXIT. If this function is not reset, 30 second theft lamp illumination will be reduced to 2 seconds. Misdiagnosis of theft deterrent system may occur.

6) Exit system. Disconnect scan tool. Program transmitters.

RPO OPTIONS FOR KEYLESS ENTRY REPROGRAMMING TABLE

Feature	Buick	Pontiac	Oldsmobile
Central Unlocking	UA6	UA6	
Delayed Illumination	STD	STD	STD
Delayed Locking	STD	STD	STD
Exit Lighting	STD	STD	STD
Illuminated Entry		C97	T2T
Keyless Entry	AU0	AU0	T2T
Load Protection	STD	STD	STD
Lock-Out Prevention	STD	STD	STD
Panic	AU0	AU0	T2T
Perimeter Lighting	AU0	AU0	
Personalization	AU0	AU0	T2T
Programmable Auto Door Locks	AU4	AU4	T2T
Retained Accessory Power		C97	T2T
Theatre Lighting	STD	STD	STD
Transmitter Chirp	AU0	AU0	T2T
Universal Theft	UA6	UA6	

PROGRAMMING TRANSMITTERS

1) Turn ignition off. Connect fused jumper wire between Data Link Connector (DLC) terminals No. 8 (Black/White wire) and No. 4 (Black wire). Close all doors. Turn ignition on. All door locks will cycle. Press and hold LOCK and UNLOCK buttons of one RKE transmitter. After a 30 second delay, door locks will cycle.

2) Program any other RKE transmitter to be used by repeating previous step. When all RKE transmitter are programmed, remove fused jumper wire from DLC connector (before turning ignition off).

NOTE: GM Tech 1 and Tech 2 scan tools may be used to program Remote Keyless Entry (RKE) transmitters. Follow screen prompts and instructions. Use EXIT key to select function

screen display. DO NOT use YES and NO keys. This may disable other features available.

RESYNCHRONIZING TRANSMITTERS

1) Ensure battery is in good condition by pressing panic button of RKE transmitter. If battery is good, horn will beep and lights flash. If horn does not beep and lights do not flash, battery is bad or RKE transmitter is malfunctioning. It is necessary to resynchronize transmitters if batteries are changed or if transmitter buttons have been depressed too many times while out of range of vehicle.

2) To resynchronize RKE transmitter with Remote Function Actuator (RFA) module. Press and hold RKE transmitter LOCK and UNLOCK buttons for 8 seconds, or until horn chirps and lights flash. Repeat steps for each RKE transmitter to be resynchronized.

REMOTE ACTIVATION VERIFICATION (RAV)

Remote Activation Verification (RAV) feature allows verification that RKE transmitter command has been received by vehicle. Various RAV mode indicator settings may be programmed. See RAV MODE SETTING INDICATORS table. RAV feature can be customized for each RKE transmitter. To program an RKE transmitter for RAV mode setting, perform the following procedures:

* Hold vehicle door lock switch down. (Doors lock)
* Press TRUNK button on RKE transmitter. (RAV stays in current mode, verified by horn chirps)
* Press TRUNK release button on RKE transmitter. (RAV feature changes to next mode, verified by horn chirps)
* Releasing vehicle door lock switch. (RAV programming is terminated)

RAV MODE SETTING INDICATORS TABLE

Mode	Unlock Vehicle	Lock Vehicle
0 (1)	.....	.....
1	..... Flash Exterior Lights	.....
2	.....	Flash Exterior Lights
3	..... Flash Exterior Lights	... Flash Exterior Lights
4	.....	Flash Ext. Lights & Chirp Horn
5	..... Flash Exterior Lights	..... Flash Ext. Lights & Chirp Horn

(1) - For Mode 0 setting, no feedback is indicated.

AUTOMATIC DOOR LOCK (ADL)

NOTE: Pontiac models ADL system differs from other models. Doors will remain locked when shifted into Park. Doors will unlock when ignition is turned to OFF position.

Automatic Door Lock (ADL) feature is programmable by operator for 4 different lock and unlock modes. ADL programming will be terminated if ignition voltage is lost, vehicle door is opened or vehicle door lock button is released. When terminated, ADL feature will remain in most recent ADL mode setting.

With ignition on, transaxle in Park and all doors closed, press and hold vehicle door lock switch in LOCK position. While

holding vehicle door lock switch, press RKE transmitter LOCK button. Press RKE transmitter LOCK button again to select next ADL mode. Starting from current ADL mode, settings are selected one at time. When cycled beyond mode 3, ADL feature will return to mode 0.

Mode 0
Auto door lock/unlock feature disabled.

Mode 1
All doors lock when transmission is shifted out of Park. No door unlock when shifted into Park. (On Pontiac models, when ignition switch is turned to OFF position).

Mode 2
All doors lock when shifted out of Park. Drivers door unlocks when shifted into Park. (On Pontiac models, when ignition switch is turned to OFF position).

Mode 3
All doors lock when shifted out of Park. All door unlock when shifted into Park. (On Pontiac models, when ignition switch is turned to OFF position).

DELAYED LOCKING

NOTE: Delayed Locking feature must be initially enabled with Tech I or Tech II scan tool, to have access to this feature. Follow screen prompts and instructions. Use EXIT key to select function screen display. DO NOT use YES and NO keys, this may disable other features available.

To Activate Delayed Locking Feature:

* Hold vehicle door lock switch in LOCK position.
* Press RKE transmitter UNLOCK button - all doors lock.
* Press RKE transmitter UNLOCK button again - all doors unlock.

Delayed locking is active.

To Deactivate Delayed Locking Feature:

* Hold vehicle door lock switch in LOCK position.
* Press RKE transmitter UNLOCK button - all doors unlock.
* Press RKE transmitter UNLOCK button again - all doors lock.

Delayed locking is disabled.

MEMORY SEAT & MIRRORS

Each RKE transmitter can be programmed to allow activation of memory seat and mirrors to memory position No. 1, memory position No. 2, exit mode or disable memory feature. Perform the following steps to program memory seat and mirror positions for each RKE transmitter. Each RKE transmitter may be set for different memory position functions.

1) Adjust seat and mirrors to desired positions.
2) Press SET button on memory seat and mirror controls, (verified by a single beep).
3) Press desired position (No. 1, No. 2 or exit), within 5 seconds, (verified by a single beep).
4) Press UNLOCK button on RKE transmitter within 5 seconds, (verified by 2 beeps).

To disable memory seat and mirror mode, repeat procedure skipping step 3). Repeat steps for each RKE transmitter.

PERIMETER LIGHTING

Perimeter lighting feature illuminates headlights, park lamps, and cornering lamps when vehicle is unlocked or locked with RKE transmitter. This feature will only be activated if twilight sentinel indicates it is dark outside. Perimeter lighting may be programmed for each RKE transmitter, by performing the following steps.

To Activate Perimeter Lighting:

* Hold vehicle door lock switch down. (Doors lock).
* Press RKE panic button - perimeter lighting is disabled. (Horn chirps 1 time).
* Press RKE panic button - perimeter lighting is enabled. (Horn chirps 2 times).
* Release vehicle lock switch. (Perimeter lighting illuminates).

Programming is completed.

To Deactivate Perimeter Lighting:

* Hold vehicle door lock switch down. (Doors lock).
* Press RKE panic button - perimeter lighting is enabled. (Horn chirps 2 times).
* Press RKE panic button - perimeter lighting is disabled. (Horn chirps 1 time).
* Release vehicle door lock switch. (Perimeter lighting illuminates)

Programming is completed.

SYMPTOM TESTS

NOTE: Symptom tests are written specifically for use with GM Tech I or Tech II scan tool. Generic scan tool can be used but may have limited functions.

NOTE: Perform preliminary inspection before any symptom tests are performed.

PRELIMINARY INSPECTION

1) Check I/P fuse No. 1 (10-amp) located under rear passenger seat, in right rear Power Distribution Center (PDC). If fuse is open, locate and repair short in Orange wire circuit. Replace fuse.

2) Check all related wiring harnesses and connectors. Check for poor ground connection at ground connector, located under rear passenger seat, on left side of vehicle.

3) Check for proper operation and installation of aftermarket equipment installed, which may affect other systems.

4) Perform functional test of door locks, power door lock switches, Retained Access Power (RAP), trunk lid operation, theft deterrent and interior lamp illumination systems. If problems exist in any of these systems, repair as necessary.

5) Perform functional test of all Remote Keyless Entry (RKE) transmitter functions. If RKE transmitter does not operate or operate a function depressed, go to appropriate system test.

SYSTEM CHECK

1) Depress door LOCK button on transmitter. All doors should lock. If all doors do not lock, see ALL DOORS LOCK FUNCTION INOPERATIVE WITH TRANSMITTER under SYSTEM TESTS.

2) Depress door UNLOCK button on transmitter once. Driver's door only should unlock. If driver's door does not unlock, see DRIVER'S DOOR UNLOCK FUNCTION INOPERATIVE WITH TRANSMITTER under SYSTEM TESTS.

3) Depress door UNLOCK button on transmitter twice within 4 seconds. All doors should unlock. If all doors do not unlock, see procedures in ALL DOORS UNLOCK FUNCTION INOPERATIVE WITH TRANSMITTER under SYSTEM TESTS.

4) Depress TRUNK lid release button on transmitter. Trunk lid release should actuate opening rear compartment. If trunk release does not actuate, see TRUNK LID RELEASE INOPERATIVE WITH TRANSMITTER under SYSTEM TESTS.

5) Depress PANIC button on transmitter. Horns should sound and lights should flash. If horn does not sound and lights do not flash, see PANIC BUTTON INOPERATIVE ON TRANSMITTER under SYSTEM TESTS.

6) Depress any transmitter button. Selected function should actuate. If selected function does not actuate, see ALL DOORS LOCK FUNCTION INOPERATIVE WITH TRANSMITTER under SYSTEM TESTS.

7) Shift transmission in and out of Park. Doors should lock when gear selector is shifted out of Park, doors should unlock when gear selector is shifted into Park. If lock function does not perform as specified, see DOORS DO NOT LOCK WHEN GEAR SELECTOR IS SHIFTED OUT OF PARK. DOORS DO NOT UNLOCK WHEN GEAR SELECTOR IS SHIFTED INTO PARK under SYSTEM TESTS.

SYSTEM TESTS

NOTE: To prevent damage to terminal, Connector Test Adaptor Kit (J 35616-A) must be used whenever a diagnostic procedure requires checking or probing a terminal. To locate and identify terminals, see WIRING DIAGRAMS.

ALL DOORS LOCK FUNCTION INOPERATIVE WITH TRANSMITTER

1) Check power door lock function using door mounted switch. If power door lock functions properly, go to next step. If power door lock does not function properly, see POWER DOOR LOCKS article.

2) Depress LOCK button on transmitter. If power door locks function properly, system is okay. Verify system operation. If power door locks do not function properly, go to next step.

3) Check function with second transmitter. If doors lock, go to step 5). If door do not lock, go to next step.

4) Replace RFA module. Verify system operation.

5) Replace RFA transmitter. Verify system operation.

DRIVER'S DOOR UNLOCK FUNCTION INOPERATIVE WITH TRANSMITTER

1) Check power door unlock function using door mounted switch. If power door lock function operates properly, go to next step. If power door locks do not function properly, see appropriate POWER DOOR LOCKS article.

2) Depress LOCK button on transmitter. If driver's door unlocks, system okay. Verify system operation.

3) Check function with second transmitter. If driver's door

unlocks, go to step 5). If driver’s door does not unlock, go to next step.

4) Replace RFA module. Verify system operation.

5) Replace RFA transmitter. Verify system operation.

ALL DOORS UNLOCK FUNCTION INOPERATIVE WITH TRANSMITTER

1) Check power door unlock function using door mounted switch. If power door lock function operates properly, go to next step. If power door locks do not function properly, see appropriate POWER DOOR LOCKS article.

2) Depress UNLOCK button on transmitter twice within 4 seconds. If power door lock function operates properly, system okay. Verify system operation.

3) Check function using a second transmitter. If power door locks operate properly, go to step 5). If power door locks do not operate properly, go to next step.

4) Replace RFA module. Verify system operation.

5) Replace RFA transmitter. Verify system operation.

TRUNK LID RELEASE INOPERATIVE WITH TRANSMITTER

1) Check trunk release function using I/P mounted switch. If trunk lid release functions properly, go to next step. If trunk lid release does not function properly, see POWER TRUNK & FUEL DOOR RELEASE article.

2) Depress TRUNK RELEASE button on transmitter. If trunk release functions properly, system is okay. Verify system operation. If trunk release does not function properly, go to next step.

3) Check function with second transmitter. If trunk release functions properly, go to next step. If trunk release does not function properly, go to next step 5).

4) Replace RFA module. Verify system operation.

5) Replace RFA transmitter. Verify system operation.

PANIC BUTTON INOPERATIVE ON TRANSMITTER

1) Depress horn pad on steering wheel. If horn sounds, go to next step. If horn does not sound, see STEERING COLUMN SWITCHES article.

2) Check exterior lighting. If exterior lighting functions properly, go to next step. If exterior lighting does not function properly, appropriate EXTERIOR LIGHTS article.

3) Synchronize transmitters. See RESYNCHRONIZING TRANSMITTERS . Depress PANIC button on transmitter. If panic function actuates, system is okay. Verify system operation. If panic function does not actuate, go to next step.

4) Using vehicles second transmitter, depress PANIC button. If panic function actuates, go to step 5). If panic function does not actuate, go to step 6).

5) Replace faulty transmitter. Depress PANIC button on transmitter. If panic function actuates, system is okay. Verify system operation. If panic function does not actuate, go to next step.

6) Replace RFA module. Verify system operation.

DOORS DO NOT LOCK WHEN GEAR SELECTOR IS SHIFTED OUT OF PARK.

DOORS DO NOT UNLOCK WHEN GEAR SELECTOR IS SHIFTED INTO PARK

1) If gear selector can be shifted out of Park when brake pedal is depressed, go to next step. If gear selector cannot be shifted out of Park when brake pedal is depressed, see SHIFT INTERLOCK SYSTEM article.

2) Check for open or short to ground in Light Green wire between RFA module and splice S296. If open or short was found, go to next step. If open or short was not found, go to step 4).

3) Repair open or short to ground in Light Green wire between RFA module and splice S296. Verify system operation.

4) Check for loose terminal connections at RFA module. If loose connections were found, repair loose connections. Verify system operation. If connections were okay, replace RFA module. Verify system operation.

REMOVAL & INSTALLATION

REMOTE FUNCTION ACTUATOR (RFA) MODULE

Removal & Installation

RFA module is located under right side of instrument panel, next to PDC. Disconnect electrical connectors. Loosen RFA mounting bolts. Slide RFA module from bracket. To install, reverse removal procedure.

WIRING DIAGRAMS

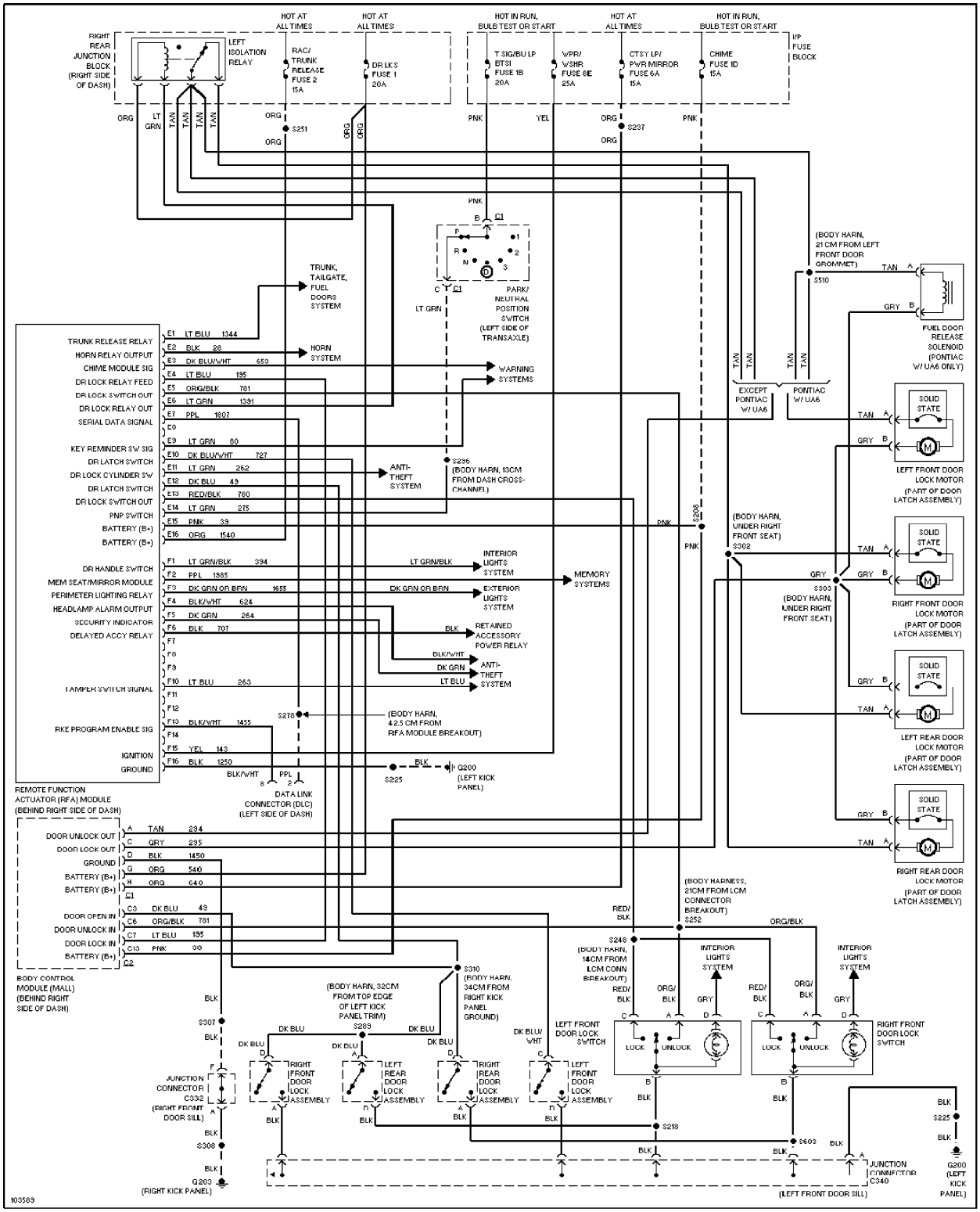

Fig. 1: Remote Keyless Entry System Wiring Diagram