CRUISE CONTROL SYSTEM

1998 Pontiac Bonneville

1998 ACCESSORIES & EQUIPMENT
General Motors Corp. - Cruise Control System

Buick; LeSabre
Oldsmobile; Eighty Eight, LSS & Regency
Pontiac; Bonneville

* PLEASE READ THIS FIRST *

WARNING: To avoid injury from accidental air bag deployment, read and carefully follow all SERVICE PRECAUTIONS and DISABLING & ACTIVATING AIR BAG SYSTEM procedures in AIR BAG RESTRAINT SYSTEM article.

DESCRIPTION & OPERATION

CRUISE CONTROL SYSTEM

Cruise control is a speed control system that maintains a desired vehicle speed under normal driving conditions. Steep grades may cause variations in selected speeds. System has capability to cruise, coast, resume speed, accelerate, and tap-up and tap-down.

The main components of the cruise control system include the cruise control module assembly, functional control switches, Vehicle Speed Sensor (VSS), cruise control release switch and brake switch. See COMPONENT LOCATIONS.

CRUISE CONTROL FUNCTIONAL SWITCHES

NOTE: Multifunction lever may also be referred to as combination switch.

Functional control switches are located on the end of the multifunction lever, which also serves as a turn signal lever. Functional control switches include a SET button and a sliding main switch with OFF, ON and R/A positions.

OFF
System disengages when switch is turned off.

ON
System is ready to be set when switch is turned on.

SET (Set/Coast)
Spring-loaded SET button engages cruise. During engagement, if SET button is pressed and held, vehicle decelerates (cruise disengages) until button is released. When button is released, cruise engages and maintains new set speed. Also, by quickly pressing and releasing (tapping) this button, the set speed is "tapped" down in one MPH increments.

R/A (Resume/Accelerate)
Spring-loaded R/A switch will not initially set cruise speed, but when cruise has been disengaged by braking, momentarily sliding this switch to R/A position will cause cruise to resume previously set speed. This is the resume function. Accelerate function occurs when R/A switch is held in position for more than one second. This causes the vehicle to accelerate until switch is released. When released,

system maintains new set speed. Also, by quickly pressing and releasing (tapping) this switch, the set speed is "tapped" up in one MPH increments.

CRUISE CONTROL MODULE ASSEMBLY

The cruise control module assembly contains an electronic controller and electric stepper motor. Controller monitors vehicle speed and operates electric stepper motor. Responding to controller, stepper motor moves a connecting strap that is attached to cruise control cable. Cable moves throttle linkage to vary throttle position in order to maintain desired cruise speed. Cruise control module assembly contains a low speed limit which will prevent system engagement below a speed of about 25 MPH.

CRUISE CONTROL RELEASE SWITCH & BRAKE SWITCH

Cruise control release and brake switches disengage cruise control operation electrically when brake pedal is depressed. This is done by activating the brake cut-out input electrical circuit to cruise control module assembly. Vehicle speed at brake actuation will be stored in system memory.

VEHICLE SPEED SENSOR (VSS)

VSS is mounted in transaxle case extension. VSS produces an AC signal with a frequency proportional to speed at which transaxle assembly output shaft rotates, which is also proportional to vehicle speed. The AC signal is sent to cruise control module assembly and speedometer by Powertrain Control Module (PCM). The signal is sent at a rate of 4000 pulses per mile, and the PCM converts number of pulses per mile per second to determine speed of vehicle.

COMPONENT LOCATIONS

COMPONENT LOCATIONS TABLE

Application	Location
Brake Switch	On Brake Pedal Bracket
Cruise Control Functional Switches	On Combination Switch
Cruise Control Module Assembly	On Left Side Of Firewall
Cruise Control Release Switch	On Brake Pedal Bracket
Vehicle Speed Sensor	In Transaxle Case Extension

TROUBLE SHOOTING

1) PCM will disable cruise control if any of the following conditions are detected:

* Engine is off.
* Transaxle is in Park, Neutral, Low or Reverse.
* Engine speed is too high.
* Vehicle speed is too high.
* Vehicle acceleration or deceleration rate is too high.
* ABS/traction control system is active for more than 2 seconds.
* Diagnostic Trouble Codes (DTCs) are set.

2) Check fuses, and replace as necessary. Visually inspect for broken or open wires. Check for a broken or partially broken wire inside insulation which could cause system malfunction but prove good in a continuity/voltage check with system disconnected.

3) Check for Diagnostic Trouble Codes (DTCs). If any codes are present, see G - TESTS W/CODES article in ENGINE PERFORMANCE section.

4) Ensure cruise control module assembly linkage is connected and moving freely. Ensure cruise control linkage is not binding. Check cruise control cable adjustment. See CRUISE CONTROL CABLE ADJUSTMENT. Ensure brake switch is installed correctly. See CRUISE CONTROL RELEASE SWITCH & BRAKE SWITCH ADJUSTMENT. Ensure center high mounted brakelight is operating.

5) Ensure any aftermarket electronic equipment is properly installed.

ADJUSTMENTS

ABS/TCC SWITCH ADJUSTMENT

Brake booster pushrod must be assembled to brake pedal before ABS/TCC switch can be adjusted. Do not press brake pedal during adjustment procedure. Insert switch into retainers until fully seated against brake pedal bracket. Twist switch clockwise about 60 degrees until travel stop is reached. When switch is fully locked, electrical connector should face 3 o'clock position.

CRUISE CONTROL RELEASE SWITCH & BRAKE SWITCH ADJUSTMENT

1) Brake booster pushrod must be assembled to brake pedal before cruise control release switch and brake switch can be adjusted. Do not press brake pedal during adjustment procedure. Insert switch into retainers until fully seated against brake pedal bracket. Twist switch clockwise about 60° until travel stop is reached. When switch is fully locked, electrical connector should face 3 o'clock position.

2) Measuring pedal travel from centerline of brake pedal, ensure switch contacts are open at 1/8-1/2" (3.5-12.5 mm) of pedal travel. Nominal actuation of brake switch contacts is about 3/16" (4.5 mm) after cruise control release switch contacts close. Check brakelights for proper operation.

CRUISE CONTROL CABLE ADJUSTMENT

Disengage adjustment lock on throttle end of cruise control cable. Cable should move freely in and out of adjuster. Hold throttle at closed position. Pull on cable conduit to take up slack in cable. Engage adjustment lock.

DIAGNOSIS & TESTING

* PLEASE READ THIS FIRST *

NOTE: Tests are written specifically for General Motor's Tech 1 scan tool. A generic scan tool may not be capable of performing all necessary test functions.

SYSTEM TEST

1) Drive vehicle at a speed greater than 25 MPH. Move cruise control main switch to ON position. Press SET button once and release.

Remove foot from accelerator pedal. Vehicle should maintain set speed.

2) Hold slider switch in R/A position until vehicle speed increases 4-5 MPH. Vehicle should accelerate and maintain new set speed. Press SET button until vehicle speed decreases 4-5 MPH. Vehicle should decelerate and maintain new set speed.

3) Depress brake pedal slightly. Cruise control system should disengage. Press slider switch to R/A position once and release. Vehicle should accelerate and maintain previously set speed. Tap-up R/A switch (less than 3/4 of a second). Vehicle speed should increase one MPH. Tap-down SET button (less than 3/8 of a second). Vehicle speed should decrease one MPH.

4) Simultaneously press SET button and R/A switch. Cruise control system should disengage, but retain previously set speed in memory. Move main switch to OFF position. Cruise control system should disengage, and set speed should be erased from memory.

REV TEST

1) Using scan tool, command PCM to enable cruise control system. Set parking brake and start engine. Move cruise control switch to OFF position, and then to ON position. Wait 3 seconds. After 3 seconds, depress and hold SET button. Hold slider switch in Resume/Accelerate (R/A) position. Fully depress and hold brake pedal.

2) After 10 seconds, release brake pedal while holding R/A and SET switches. Engine RPM should increase momentarily, and then return to idle. Clear any Diagnostic Trouble Codes (DTCs) which may be set.

CRUISE CONTROL INOPERATIVE

NOTE: To avoid misdiagnosis, perform Rev Test and Trouble Shooting. See REV TEST and TROUBLE SHOOTING. Check for stored DTCs. See G - TESTS W/CODES article in ENGINE PERFORMANCE section.

1) Turn cruise control switch to OFF position. Disconnect cruise control module assembly connector. Turn ignition switch to RUN position. Using a test light connected to ground, probe cruise control module assembly connector (harness side) terminal "F" (Brown wire). See WIRING DIAGRAMS. If test light illuminates, go to next step. If test light does not illuminate, repair poor connection or open in Brown wire between cruise control module assembly and instrument panel fuse block.

2) Using a test light, probe between cruise control module assembly connector (harness side) terminals "F" (Brown wire) and "E" (Black wire). See WIRING DIAGRAMS. If test light illuminates, go to next step. If test light does not illuminate, repair poor connection or open in Black wire between cruise control module assembly and ground connection.

3) Turn cruise control switch to ON position. Using a test light, probe between cruise control module assembly connector (harness side) terminals "A" (Gray wire) and "E" (Black wire). See WIRING DIAGRAMS. If test light illuminates, go to step 5). If test light does not illuminate, go to next step.

4) Check for a poor connection, open or short to ground in Gray wire between multifunction lever (cruise control switch) and cruise control module assembly. If Gray wire is okay, replace multifunction lever (cruise control switch). See STEERING COLUMN SWITCHES article.

5) Using a test light, probe between cruise control module assembly connector (harness side) terminals "B" (Dark Blue wire) and "E" (Black wire). See WIRING DIAGRAMS. While observing test light, press and hold cruise control switch in SET/COAST position. If test

light illuminates, go to step 7). If test light does not illuminate, go to next step.

6) Check for a poor connection, open or short to ground in Dark Blue wire between multifunction lever (cruise control switch) and cruise control module assembly. If Dark Blue wire is okay, replace multifunction lever (cruise control switch). See STEERING COLUMN SWITCHES article.

7) Using a test light, probe between cruise control module assembly connector (harness side) terminals "C" (Gray/Black wire) and "E" (Black wire). See WIRING DIAGRAMS. While observing test light, press and hold cruise control switch in SET/COAST position. If test light illuminates, go to next step. If test light does not illuminate, go to step 9).

8) Check Gray/Black wire for a short to Dark Blue wire between multifunction lever (cruise control switch) and cruise control module assembly. If Gray/Black wire is okay, replace multifunction lever (cruise control switch). See STEERING COLUMN SWITCHES article.

9) Using a test light, probe between cruise control module assembly connector (harness side) terminals "D" (Purple wire) and "E" (Black wire). See WIRING DIAGRAMS. If test light illuminates, go to step 12). If test light does not illuminate, go to next step.

10) Using a test light connected to ground, backprobe ABS/TCC switch connector (harness side) terminal "B" (Purple wire). See WIRING DIAGRAMS. If test light illuminates, repair poor connection or open in Purple wire between ABS/TCC switch, cruise control module assembly and PCM. If test light does not illuminate, go to next step.

11) Check for a poor connection or open in Brown wire between ABS/TCC switch and instrument panel fuse block. Check ABS/TCC switch for proper adjustment. See ABS/TCC SWITCH ADJUSTMENT. If ABS/TCC switch is properly adjusted, replace ABS/TCC switch. See procedures in ABS/TCC SWITCH R & I.

12) Set parking brake. Raise drive wheels. Using a DVOM, measure voltage between cruise control module assembly connector (harness side) terminal "K" (Dark Green/White wire) and ground. See WIRING DIAGRAMS. While observing DVOM, rotate drive wheels by hand. If voltage varies, go to next step. If voltage does not vary, check for a poor connection or open in Dark Green/White wire between cruise control module assembly and PCM.

13) Turn ignition switch to OFF position. Check for a poor connection or open in Dark Green wire between cruise control module assembly and PCM. Reinstall cruise control module assembly. Connect scan tool to Data Link Connector (DLC). Start engine. Clear any existing Diagnostic Trouble Codes (DTCs). Using scan tool, monitor SMCC INHIBITED display. Attempt to operate vehicle in cruise control. If SMCC INHIBITED is not displayed on scan tool, go to next step. If MCC INHIBITED is displayed on scan tool, check PCM. See G - TESTS W/CODES article in ENGINE PERFORMANCE section.

14) Clear any existing DTCs. Using scan tool, command SMCC to ALLOW cruise. Using a DVOM connected to battery voltage, probe cruise control module assembly connector (harness side) terminal "H" (Dark Green wire). See WIRING DIAGRAMS. If battery voltage is present, go to next step. If battery voltage is not present, go to step 16).

15) Replace cruise control module assembly. See procedures in CRUISE CONTROL MODULE ASSEMBLY under REMOVAL & INSTALLATION.

16) Repair short to voltage in Dark Green wire between cruise control module assembly and PCM. If Dark Green wire is okay, check PCM. See G - TESTS W/CODES article in ENGINE PERFORMANCE section.

CRUISE CONTROL WILL NOT RESUME, ACCELERATE OR TAP-UP

1) Disconnect cruise control module assembly connector. Turn ignition switch to RUN position. Turn cruise control switch to ON position. Using a test light connected to ground, probe cruise control

module assembly connector (harness side) terminal "C" (Gray/Black wire). See WIRING DIAGRAMS. While observing test light, press and hold cruise control switch in R/A position. If test light illuminates, go to next step. If test light does not illuminate, go to step 3).

2) Ensure cruise control module assembly connector terminal "C" (Gray/Black wire) is clean and tight. If connection is okay, replace cruise control module assembly. See CRUISE CONTROL MODULE ASSEMBLY under REMOVAL & INSTALLATION.

3) Check for an open or short to ground in Gray/Black wire between cruise control module assembly and multifunction lever (cruise control switch). If Gray/Black wire is okay, replace multifunction lever (cruise control switch). See STEERING COLUMN SWITCHES article.

REMOVAL & INSTALLATION

* PLEASE READ THIS FIRST *

CAUTION: When battery is disconnected, vehicle computer and memory systems may lose memory data. Driveability problems may exist until computer systems have completed a relearn cycle. See COMPUTER RELEARN PROCEDURES article in GENERAL INFORMATION section before disconnecting battery.

CRUISE CONTROL FUNCTIONAL SWITCHES

Functional control switches are located on the end of the multifunction lever, which also serves as a turn signal lever. Switches are not serviceable and must be replaced with multifunction lever as an assembly. See STEERING COLUMN SWITCHES article.

CRUISE CONTROL RELEASE SWITCH & BRAKE SWITCH

CAUTION: DO NOT push or pull on brake pedal during switch installation. DO NOT side load brake switch during installation. Damage to brake system or switches may occur.

Removal & Installation

1) Disconnect negative battery cable. Remove left instrument panel sound insulator. Twist switch counterclockwise to unlock, and pull switch out of retainer. Disconnect electrical connectors. See Fig. 1.

NOTE: If ABS/TCC switch was also removed, install ABS/TCC switch before installing cruise control release switch and brake switch.

2) To install, reconnect electrical connectors. Slide switch into retainer, and press until switch plunger is fully depressed into switch barrel. Twist switch clockwise about 60 degrees until travel stop is reached. When switch is fully locked, electrical connector should face 3 o’clock position.

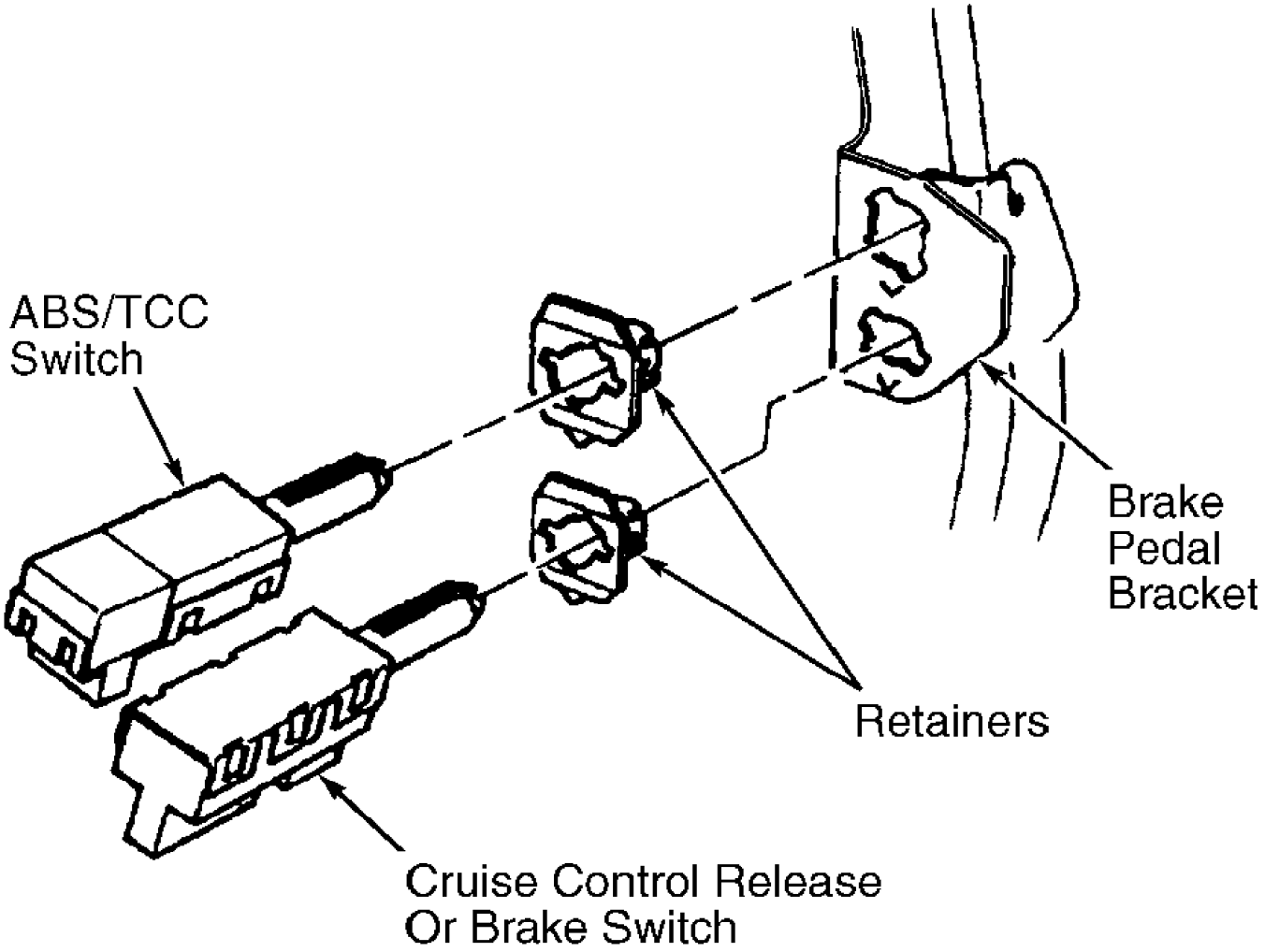

98B01095
Fig. 1: Identifying Brake Pedal Switches
Courtesy of General Motors Corp.

ABS/TCC SWITCH R & I

CAUTION: DO NOT push or pull on brake pedal during switch installation. DO NOT side load brake switch during installation. Damage to brake system or switches may occur.

Removal & Installation

1) Disconnect negative battery cable. Remove cruise control release switch and brake switch. See CRUISE CONTROL RELEASE SWITCH & BRAKE SWITCH. Twist switch counterclockwise to unlock, and pull switch out of retainer. Disconnect electrical connectors. See Fig. 1.

2) To install, reconnect electrical connectors. Slide switch into retainer, and press until switch plunger is fully depressed into switch barrel. Twist switch clockwise about 60° until travel stop is reached. When switch is fully locked, electrical connector should face 3 o'clock position. Install cruise control release switch and brake switch.

CRUISE CONTROL CABLE

NOTE: Note cable routing prior to removal.

Removal & Installation

Disconnect cruise control cable at TBI cam and throttle body bracket. Disconnect cable from cruise control module assembly. To install, reverse removal procedure. Adjust cable. See CRUISE CONTROL CABLE ADJUSTMENT.

CRUISE CONTROL MODULE ASSEMBLY

Removal & Installation

Disconnect negative battery cable. Remove cruise control cable. See CRUISE CONTROL CABLE. Disconnect cruise control module assembly electrical connector. Remove cruise control module assembly. Remove module assembly from mounting bracket. To install, reverse removal procedure. Adjust cruise control cable. See CRUISE CONTROL CABLE ADJUSTMENT.

VEHICLE SPEED SENSOR (VSS)

Removal & Installation

Disconnect negative battery cable. Raise and support vehicle. Disconnect VSS electrical connector. Remove VSS mounting bolt. Remove VSS from transaxle case extension. To install, reverse removal procedure. Tighten bolt to 97 INCH lbs. (11 N.m).

WIRING DIAGRAMS

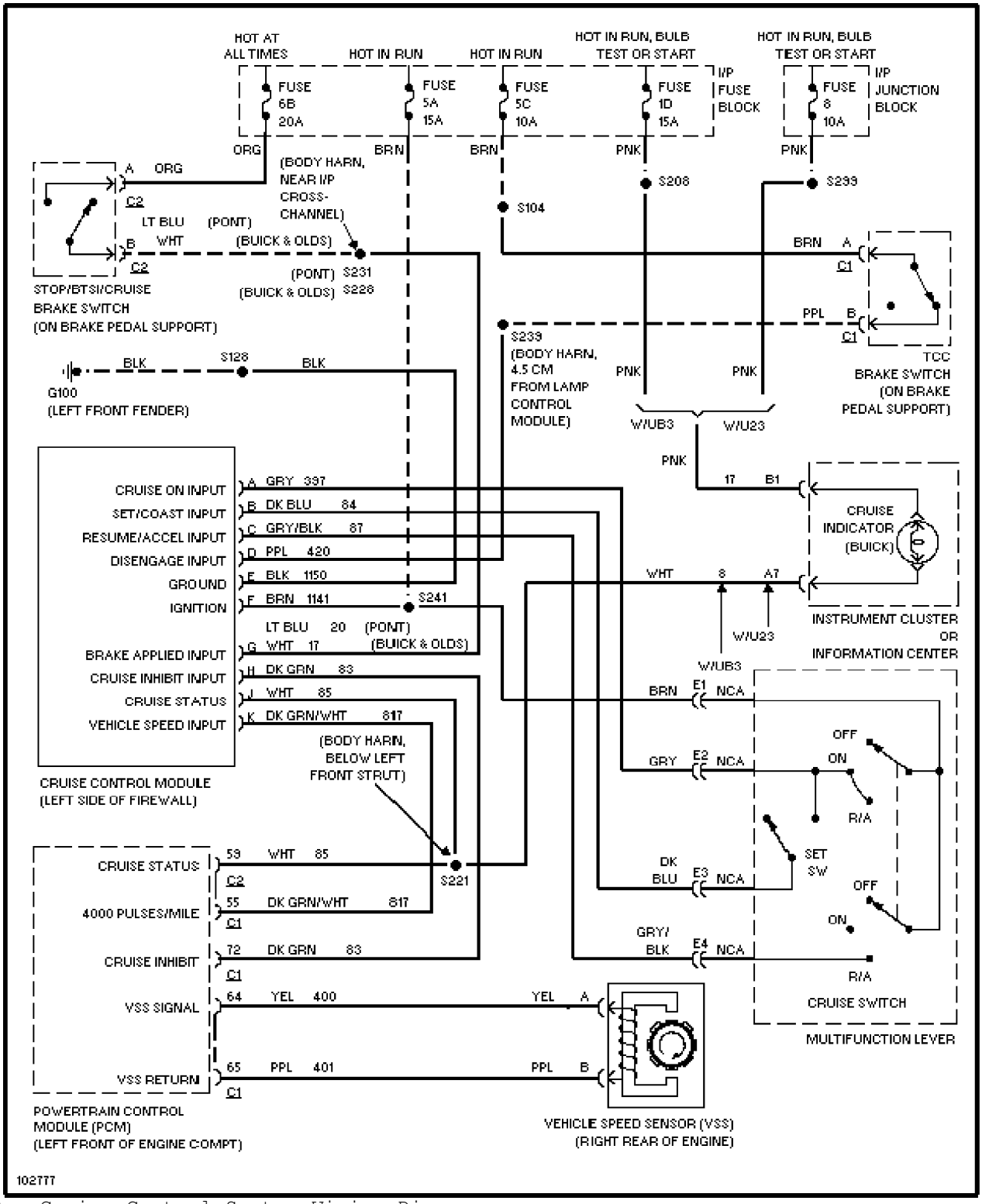

Fig. 2: Cruise Control System Wiring Diagram