Diagram 2 AUTOMATIC TRANSMISS...

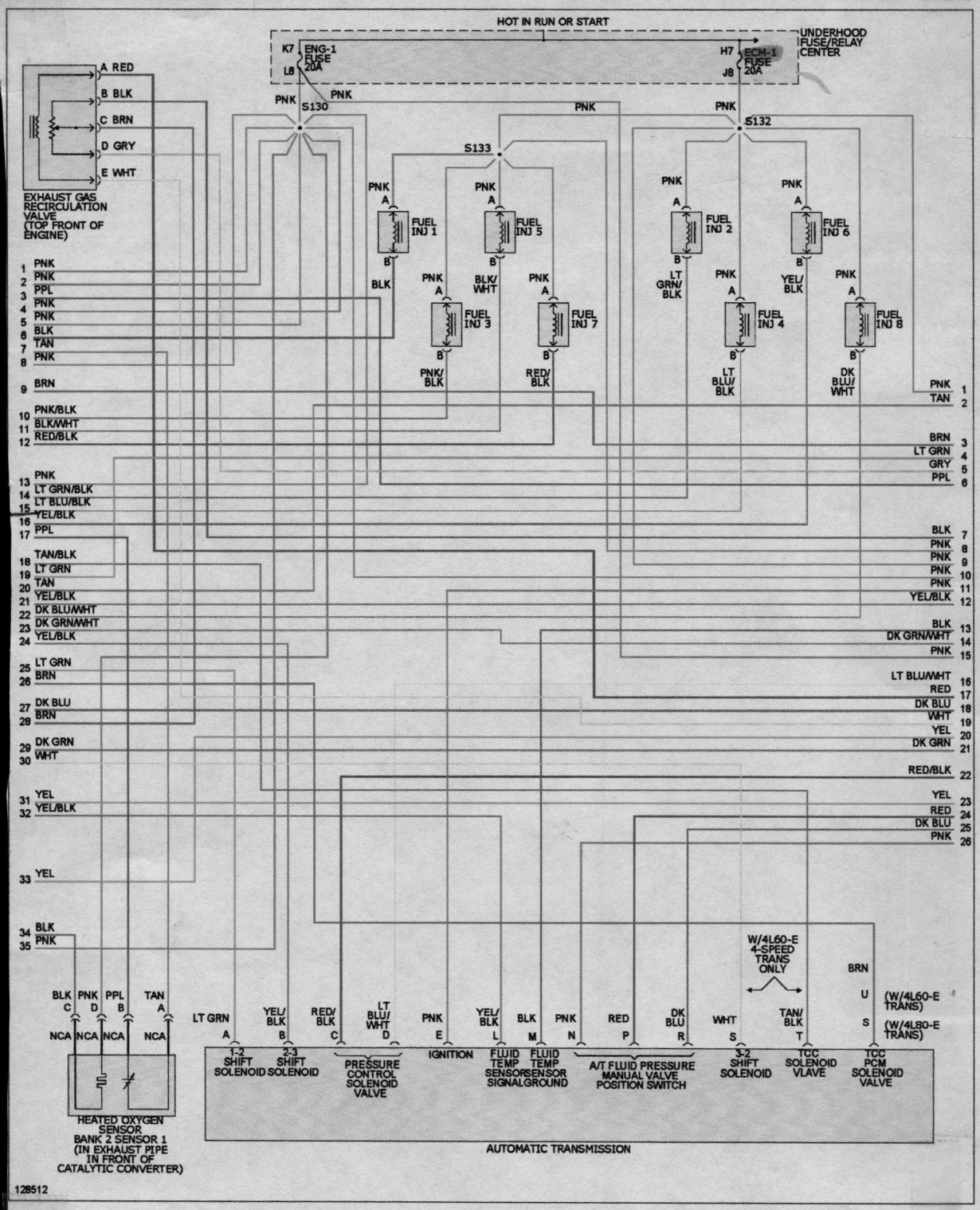

Copyright 2001-2019 Identifix, Inc. All rights reserved.